Rev	Change	Date	Int.

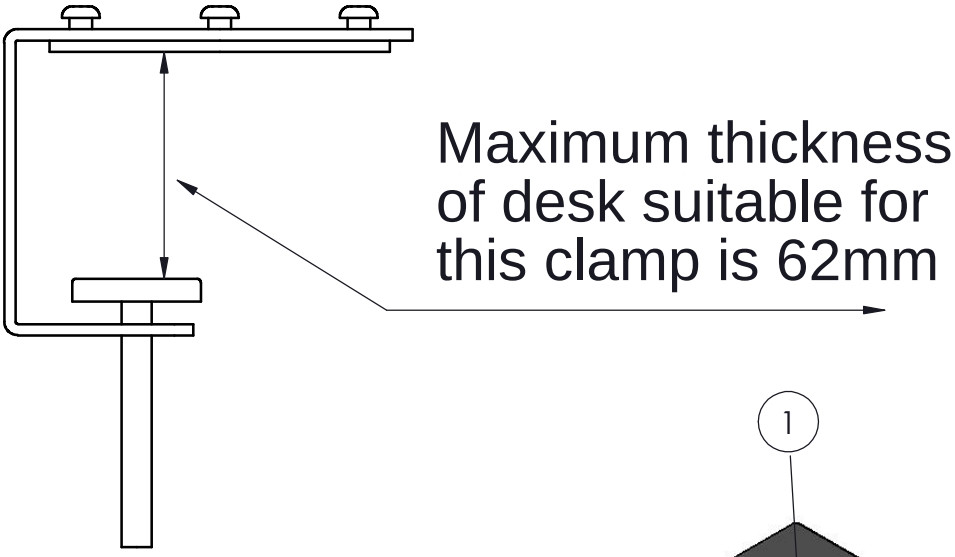

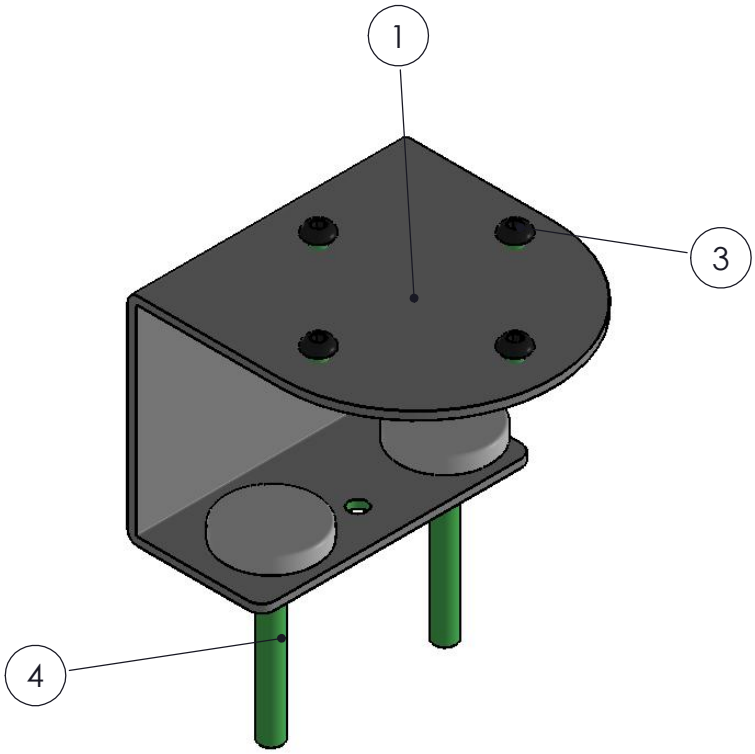

POS	PARTNUMBER	QTY.	DESCRIPTION
1	CB00103U	1	Bracket for Clamp (101x108x81mm)
2	P22151-02	1	Rubberfelt 3mm for Flange (FP Series)
3	M9936-0606-RAA	4	M6x6mm button headed screw, black
4	M7925-0870	2	Adjusting Screw

Description	Category	Weight	Revision
Bracket for Clamp (101x108x81mm)	Poles	0.73 kg	A

ergonomic solutions

COPYRIGHT © ERGONOMIC SOLUTIONS 2014
www.ergonomic-solutions.net

Unless otherwise specified tolerances according to ISO 2768-m
All dimensions are in millimeters

Size: A4	Name	Date
Drawn	jp	16-12-2014
Last Update	jp	16-12-2014

Drawing No

CB00103